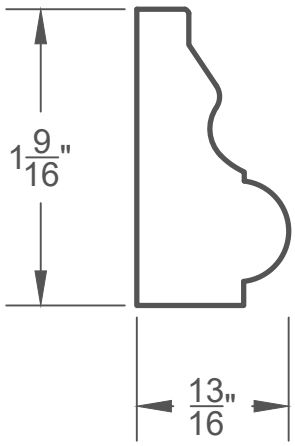

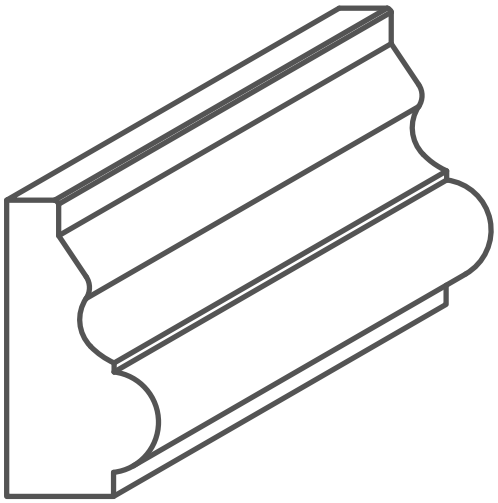

PM 1068 FULL SCALE