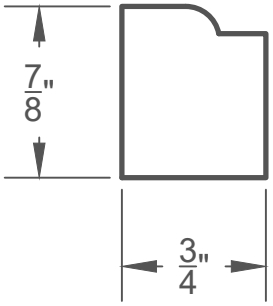

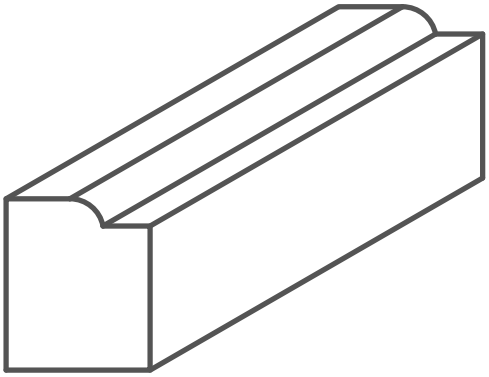

RN 1001 FULL SCALE